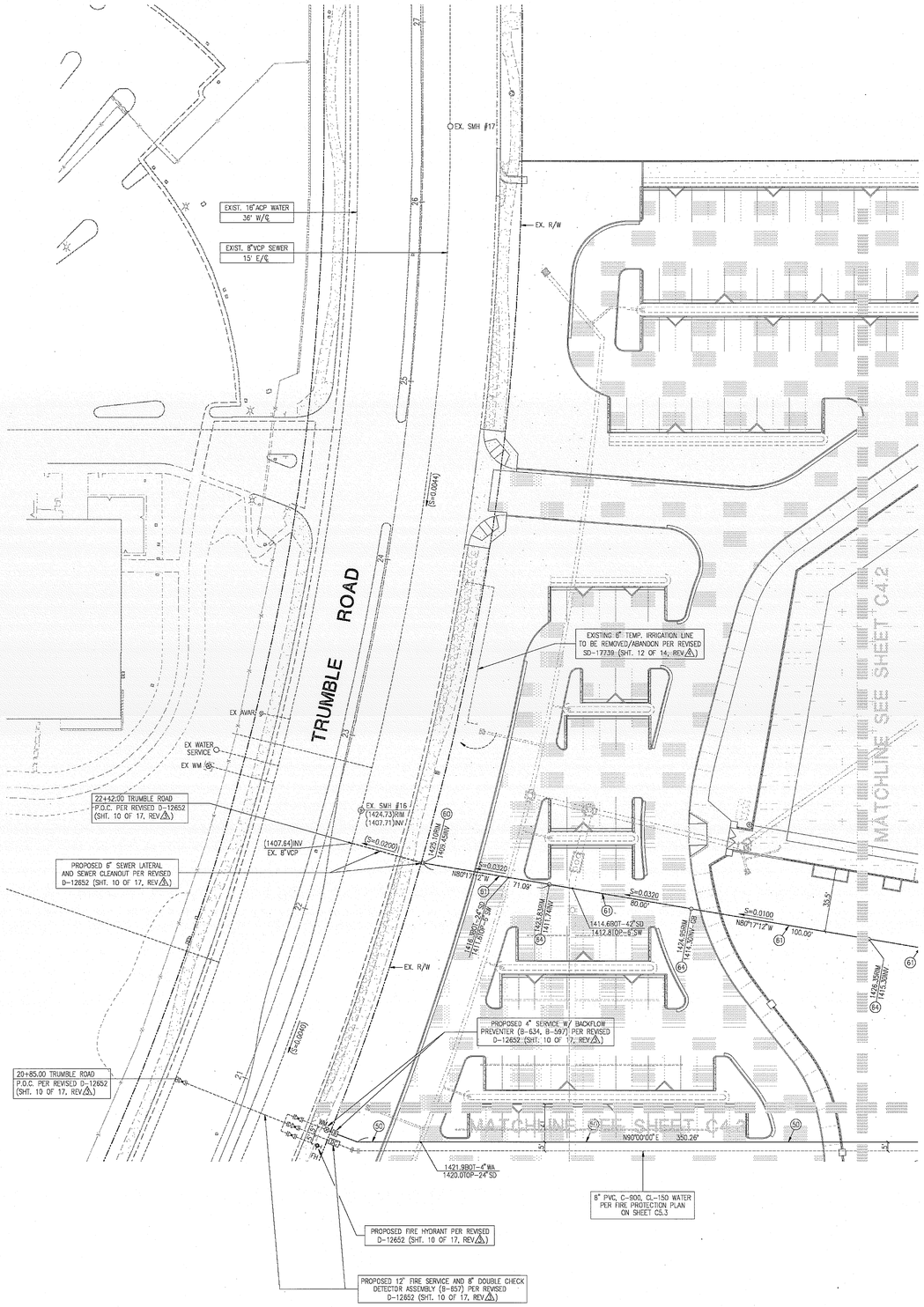

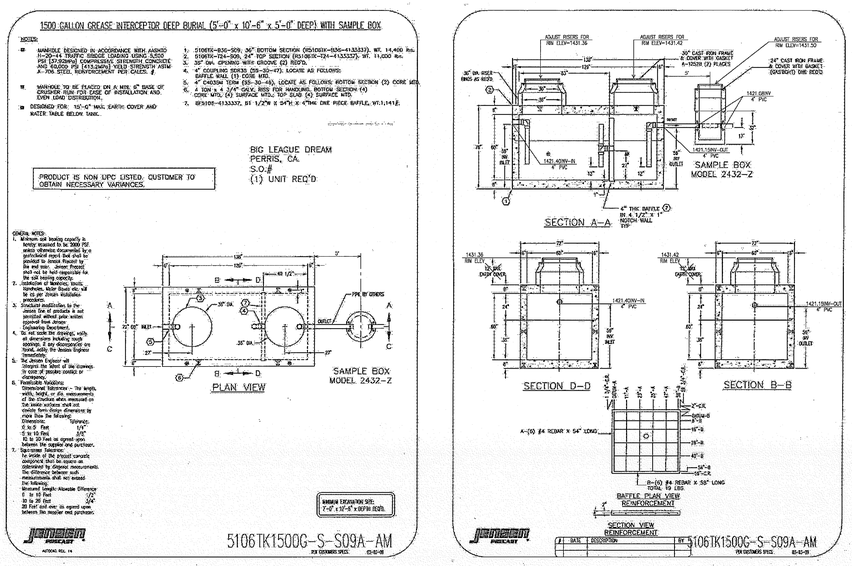

65 1500 GAL GREASE INTERCEPTOR DETAIL

SEE PLAN VIEW ON SHEET C4.4

NO SCALE

WATER CONSTRUCTION NOTES

(50) CONSTRUCT 4" PVC AWWA C-900, CL150 PIPE WITH TRACING WIRE PER E.M.W.D. STD. DWG. B-533 & B-656. PIPE BEDDING PER E.M.W.D. STD. DWG. B-408, AND TRENCH BACKFILL PER E.M.W.D. STD. DWG. B-286B.

SEWER CONSTRUCTION NOTES

(60) JOIN EXISTING SEWER CLEANOUT AT PUBLIC RIGHT-OF-WAY PER E.M.W.D. STD. DWG. SB-52.

(61) CONSTRUCT 6" PVC (SDR 35) SEWER LINE, PIPE BEDDING PER E.M.W.D. STD. DWG. SB-157.

(64) CONSTRUCT SEWER CLEANOUT PER E.M.W.D. STD. DWG. SB-52.

NOTES

1. SEE SHEET C1.0 FOR LEGEND AND ABBREVIATIONS.
2. SEE SHEET C2.1 FOR GRADING AND SURFACE DRAINAGE.
3. SEE SHEET C3.1 FOR STORM DRAIN CONSTRUCTION.

DIGALERT

DIAL TOLL FREE
1-800-422-4133

AT LEAST TWO DAYS BEFORE YOU DIG

UNDERGROUND SERVICE ALERT OF SOUTHERN CALIFORNIA

0' 15' 30' 60'

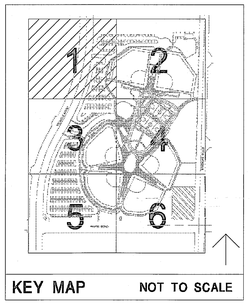

KEY MAP NOT TO SCALE

MIG

MOORE IACOFANO GOLTSMAN, INC.
801 N. HARBOR BLVD.
FULLERTON, CA 92831
TEL 714/871-3638
FAX 714/871-1188
www.migcom.com

CONSULTANT:

PLANS PREPARED BY:

WALDEN & ASSOCIATES
CIVIL ENGINEERS - LAND SURVEYORS - PLANNERS
2503 WHITE ROAD - SUITE B, IRVINE, CA 92614
(949) 660-0110 - FAX (949) 660-0410

PROJECT TEAM:

LANDSCAPE ARCHITECT
MIG INC.

ARCHITECT
PITASSI ARCHITECTS INC.

CIVIL ENGINEERS/SURVEYOR
WALDEN & ASSOCIATES

STRUCTURAL ENGINEERS
CORREIA CONSULTING & DESIGN

ELECTRICAL ENGINEERS
LRA ENGINEERS

IRRIGATION DESIGNER
WILLIAMS IRRIGATION DESIGN

GEOTECHNICAL ENGINEERS
CONVERSE CONSULTANTS

TURF GRASS CONSULTANT
GUISE AND ASSOCIATES

PERRIS VALLEY Big League Dreams

2155 Trumble Road
Perris, California, 92570

SHEET TITLE

SEWER AND WATER PLAN (PRIVATE)

100% CONSTRUCTION DOCUMENT

DATE	REVISIONS

STAMP

REGISTERED PROFESSIONAL ENGINEER DAVID LEE BACKUS No. 40496 Exp. 3-31-11 STATE OF CALIFORNIA

CHECKED BY	DATE
D.B.	01-07-10
DATE 01-07-10	FILE NAME
DRAWN BY B.A.	SHEET C4.1
JOB NO. 05208.00	
SCALE 1"=30'-0"	45 OF 313 SHEETS