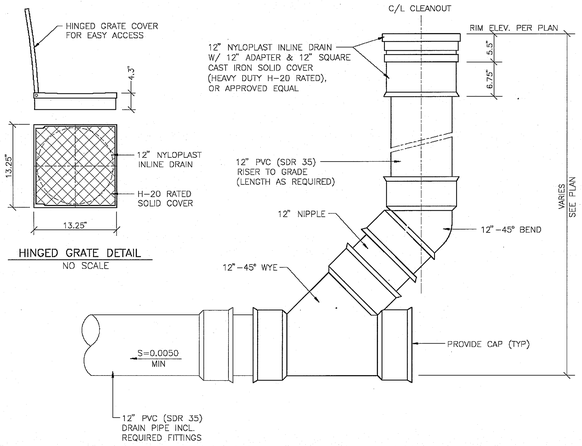

24a 12" STORM DRAIN CLEANOUT DETAIL
NO SCALE

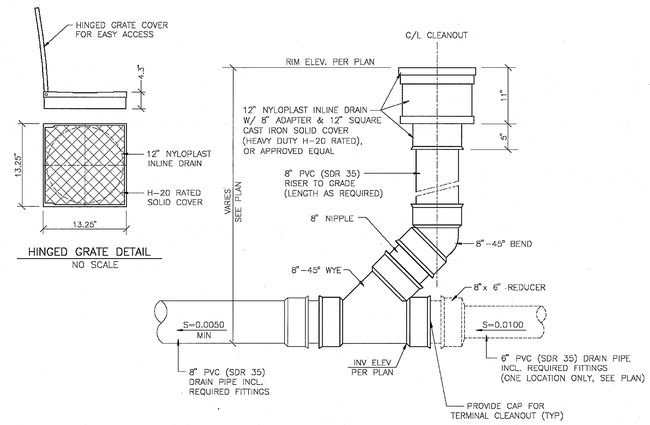

24b 8" STORM DRAIN CLEANOUT DETAIL
NO SCALE

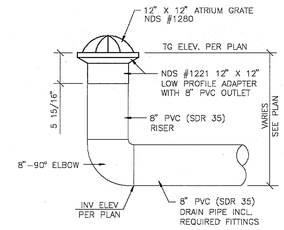

26 12" x 12" N.D.S. ATRIUM GRATE DETAIL
NO SCALE

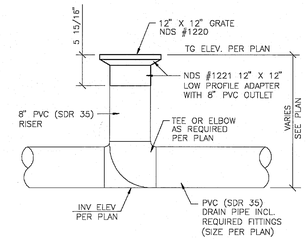

27 12" x 12" N.D.S. GRATE DETAIL
NO SCALE

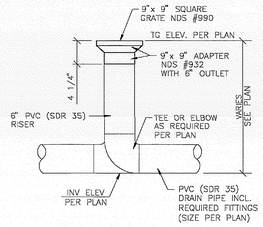

28 9" x 9" N.D.S. GRATE DETAIL
NO SCALE

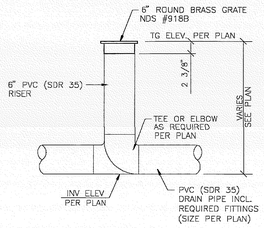

29 6" N.D.S. GRATE DETAIL
NO SCALE

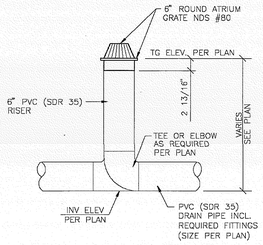

30 6" N.D.S. ATRIUM GRATE DETAIL
NO SCALE

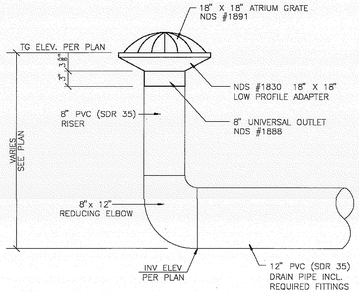

31 18" x 18" N.D.S. ATRIUM GRATE DETAIL
NO SCALE

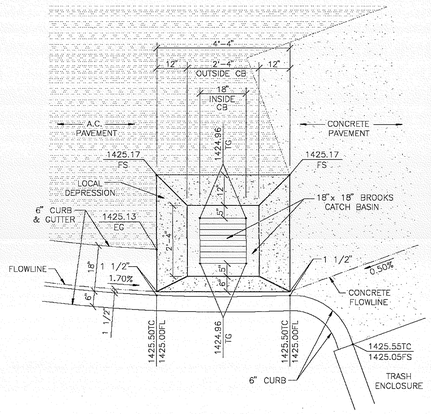

LOCAL DEPRESSION DETAIL "C"
NO SCALE
PER COUNTY OF RIVERSIDE STD. NO. 312
(MODIFIED AS SHOWN)

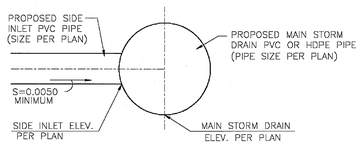

NOTES:
1. CENTER LINE OF SIDE INLET SHALL BE ON RADIUS OF MAIN STORM DRAIN.
2. ALL PIPE TO PIPE CONNECTIONS SHALL UTILIZE MANUFACTURED FITTINGS SUCH AS TEES OR WYES.

TYPICAL PIPE TO PIPE CONNECTION DETAIL "A"
NO SCALE

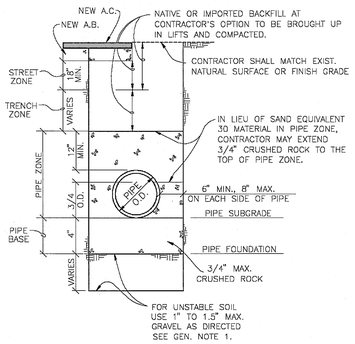

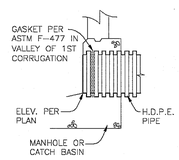

H.D.P.E. CONNECTION DETAIL

GENERAL NOTES:
1. IF UNSTABLE SOIL IS ENCOUNTERED, CITY PUBLIC WORKS INSPECTOR WILL DETERMINE DEPTH OF REMOVAL AND SIZE OF FOUNDATION ROCK.
2. 2 SACK SLURRY CEMENT BACKFILL SHALL BE USED WHERE COVER IS UNDER 4'.
3. CONCRETE ENCASEMENT SHALL BE USED WHERE TRENCH WIDTH AT THE UPPER LIMIT OF PIPE ZONE EXCEEDS THE MAX. WIDTH (PIPE O.D. + 8").

H.D.P.E. & P.V.C. PIPE BEDDING DETAIL "B"
NO SCALE

STORM DRAIN CONSTRUCTION NOTES

24a CONSTRUCT 12" STORM DRAIN CLEANOUT PER DETAIL #24a HEREON.
24b CONSTRUCT 8" STORM DRAIN CLEANOUT PER DETAIL #24b HEREON.
26 CONSTRUCT 12"x12" N.D.S. ATRIUM GRATE PER DETAIL #26 HEREON.
27 CONSTRUCT 12"x12" N.D.S. GRATE PER DETAIL #27 HEREON.
28 CONSTRUCT 9"x 9" N.D.S. GRATE PER DETAIL #28 HEREON.
29 CONSTRUCT 6" N.D.S. GRATE PER DETAIL #29 HEREON.
30 CONSTRUCT 6" N.D.S. ATRIUM GRATE PER DETAIL #30 HEREON.
31 CONSTRUCT 18"x18" N.D.S. ATRIUM GRATE PER DETAIL #31 HEREON.

NOTES

1. DETAIL NUMBERS ON THIS SHEET RELATE TO THE CONSTRUCTION NOTES HEREON.
2. SEE SHEET C1.0 FOR LEGEND AND ABBREVIATIONS.
3. SEE SHEET C3.01 FOR ADDITIONAL STORM DRAIN DETAILS.
4. SEE SHEETS C3.1 THROUGH C3.8 FOR STORM DRAIN CONSTRUCTION.

MIG

MOORE IACOFANO GOLTSMAN, INC.
801 N. HARBOR BLVD.
FULLERTON, CA 92831
TEL 714/871-3438
FAX 714/871-1168
www.migcom.com

CONSULTANT:

PLANS PREPARED BY:
WALDEN & ASSOCIATES
CIVIL ENGINEERS - LAND SURVEYORS - PLANNERS
2655 WHITE ROAD - SUITE B, IRVINE, CA 92614
(949) 660-0110 - FAX (949) 660-0118

PROJECT TEAM:
LANDSCAPE ARCHITECT
MIG INC.
ARCHITECT
PITASSI ARCHITECTS INC.
CIVIL ENGINEERS/SURVEYOR
WALDEN & ASSOCIATES
STRUCTURAL ENGINEERS
CORREIA CONSULTING & DESIGN
ELECTRICAL ENGINEERS
LRA ENGINEERS
IRRIGATION DESIGNER
WILLIAMS IRRIGATION DESIGN
GEOTECHNICAL ENGINEERS
CONVERSE CONSULTANTS
TURF GRASS CONSULTANT
GUISE AND ASSOCIATES

PERRIS VALLEY Big League Dreams

2155 Trumble Road
Perris, California, 92570

SHEET TITLE
STORM DRAIN PLAN DETAIL SHEET

100% CONSTRUCTION DOCUMENT

DATE	REVISIONS

STAMP
REGISTERED PROFESSIONAL ENGINEER DAVID LEE BARON No. 40496 CIVIL STATE OF CALIFORNIA

CHECKED BY	DATE
D.B.	01-07-10
DATE 01-07-10	FILE NAME
DRAWN BY B.A.	SHEET C3.02
JOB NO. 05208.00	
SCALE AS SHOWN	30 OF 313 SHEETS