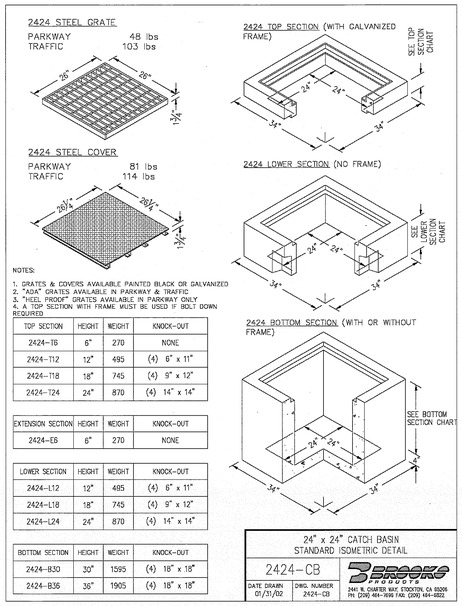

TOP SECTION	HEIGHT	WEIGHT	KNOCK-OUT
2424-T6	6"	270	NONE
2424-T12	12"	495	(4) 6" x 11"
2424-T18	18"	745	(4) 9" x 12"
2424-T24	24"	870	(4) 14" x 14"

EXTENSION SECTION	HEIGHT	WEIGHT	KNOCK-OUT
2424-E6	6"	270	NONE

LOWER SECTION	HEIGHT	WEIGHT	KNOCK-OUT
2424-L12	12"	495	(4) 6" x 11"
2424-L18	18"	745	(4) 9" x 12"
2424-L24	24"	870	(4) 14" x 14"

BOTTOM SECTION	HEIGHT	WEIGHT	KNOCK-OUT
2424-B30	30"	1595	(4) 18" x 18"
2424-B36	36"	1905	(4) 18" x 18"

(20) 24" x 24" CATCH BASIN DETAIL
NO SCALE

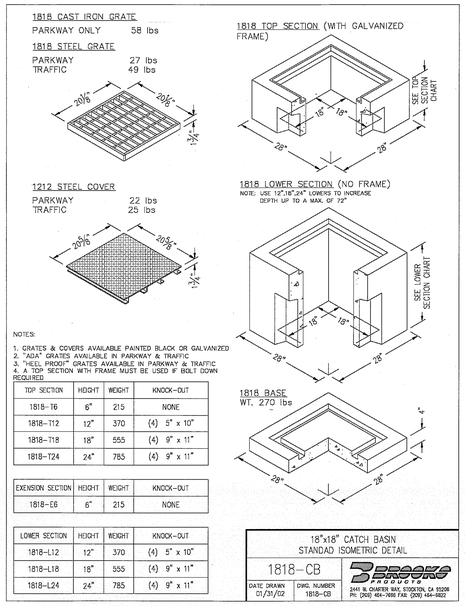

TOP SECTION	HEIGHT	WEIGHT	KNOCK-OUT
1818-T6	6"	215	NONE
1818-T12	12"	370	(4) 5" x 10"
1818-T18	18"	555	(4) 6" x 11"
1818-T24	24"	785	(4) 9" x 11"

EXENSION SECTION	HEIGHT	WEIGHT	KNOCK-OUT
1818-E6	6"	215	NONE

LOWER SECTION	HEIGHT	WEIGHT	KNOCK-OUT
1818-L12	12"	370	(4) 5" x 10"
1818-L18	18"	555	(4) 9" x 11"
1818-L24	24"	785	(4) 9" x 11"

(21) 18" x 18" CATCH BASIN DETAIL
NO SCALE

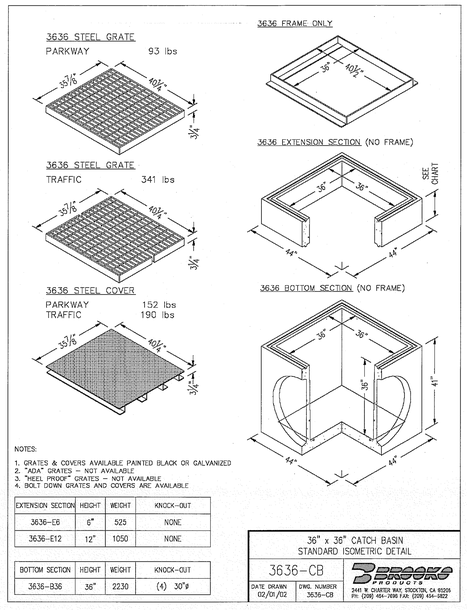

EXTENSION SECTION	HEIGHT	WEIGHT	KNOCK-OUT
3636-E6	6"	525	NONE
3636-E12	12"	1050	NONE

BOTTOM SECTION	HEIGHT	WEIGHT	KNOCK-OUT
3636-B36	36"	2230	(4) 30"ø

(23) 36" x 36" CATCH BASIN DETAIL
NO SCALE

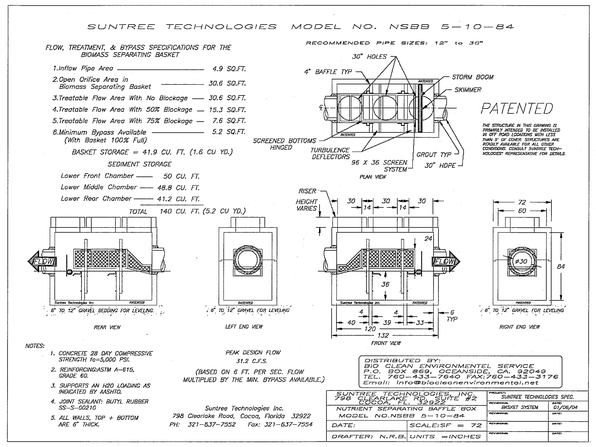

MODEL NO. NSBB 5-10-84

(22a) BAFFLE BOX DETAIL
NO SCALE

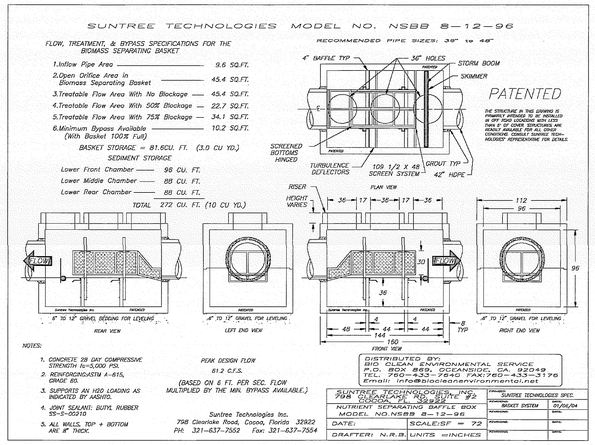

MODEL NO. NSBB 8-12-96

(22b) BAFFLE BOX DETAIL
NO SCALE

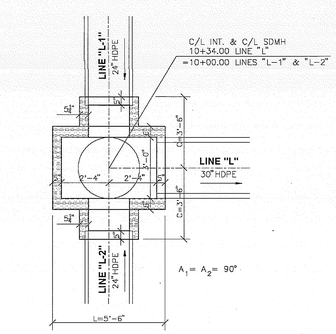

STORM DRAIN MANHOLE #1

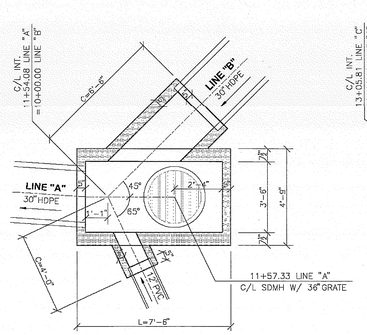

STORM DRAIN MANHOLE #3

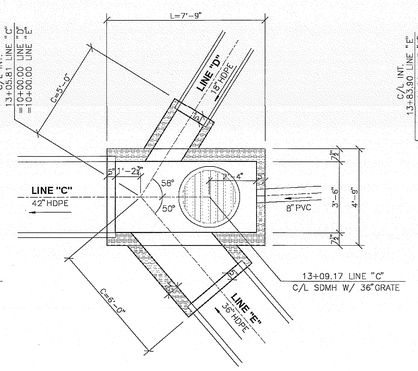

STORM DRAIN MANHOLE #9

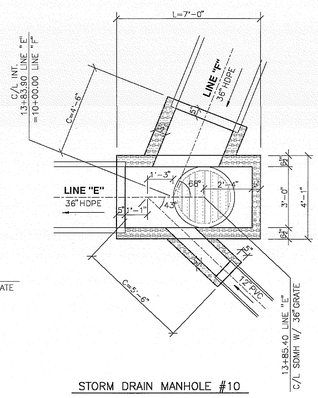

STORM DRAIN MANHOLE #10

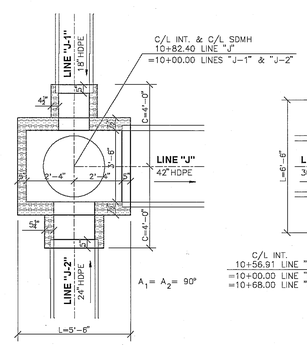

STORM DRAIN MANHOLE #7

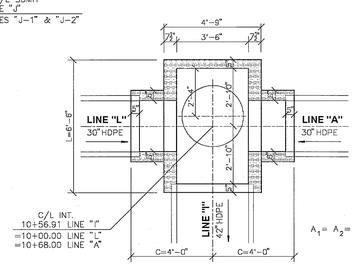

STORM DRAIN MANHOLE #2

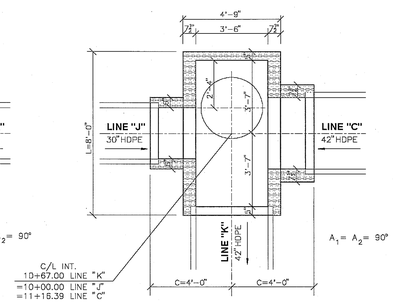

STORM DRAIN MANHOLE #8

(32) STORM DRAIN MANHOLE DETAILS
NO SCALE
MANHOLE NO. 4 PER RCFC & WCD STD. DWG MH254

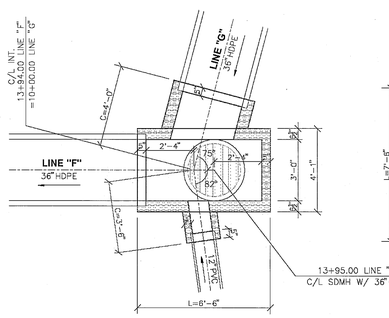

STORM DRAIN MANHOLE #11

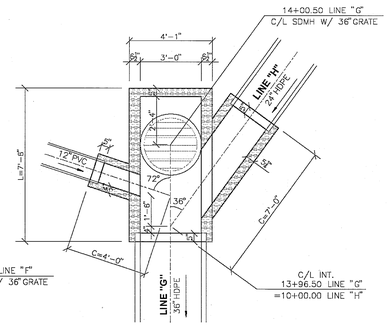

STORM DRAIN MANHOLE #12

(35) STORM DRAIN MANHOLE DETAILS
NO SCALE
MANHOLE NO. 4 PER RCFC & WCD STD. DWG MH254
(MODIFIED WITH 36" GRATED COVER)

STORM DRAIN CONSTRUCTION NOTES

(20) CONSTRUCT 24"x24" BROOKS CATCH BASIN 2424-CB WITH ADA GRATE PER DETAIL #20 HEREON (OR APPROVED EQUAL).

(21) CONSTRUCT 18"x18" BROOKS CATCH BASIN 1818-CB WITH ADA GRATE PER DETAIL #21 HEREON (OR APPROVED EQUAL).

(22a) CONSTRUCT BAFFLE BOX MODEL NO. NSBB 5-10-84 BY BIOCLEAN PER DETAIL #22a HEREON (OR APPROVED EQUAL). CONTRACTOR TO COORDINATE WITH MANUFACTURER.

(22b) CONSTRUCT BAFFLE BOX MODEL NO. NSBB 8-12-96 BY BIOCLEAN PER DETAIL #22b HEREON (OR APPROVED EQUAL). CONTRACTOR TO COORDINATE WITH MANUFACTURER.

(23) CONSTRUCT 36"x36" BROOKS CATCH BASIN 3636-CB PER DETAIL #23 HEREON (OR APPROVED EQUAL).

(32) CONSTRUCT MANHOLE NO. 4 PER RCFC & WCD STD. DWG MH254, AND PER DETAIL #32 HEREON.

(35) CONSTRUCT MANHOLE NO. 4 PER RCFC & WCD STD. DWG MH254, MODIFIED WITH 36" ALHAMBRA FOUNDRY GRATED COVER A-1558-36 PER DETAIL #35 HEREON.

NOTES

1. DETAIL NUMBERS ON THIS SHEET RELATE TO THE CONSTRUCTION NOTES HEREON.
2. SEE SHEET C1.0 FOR LEGEND AND ABBREVIATIONS.
3. SEE SHEET C3.02 FOR ADDITIONAL STORM DRAIN DETAILS.
4. SEE SHEETS C3.1 THROUGH C3.8 FOR STORM DRAIN CONSTRUCTION.

MIG
MOORE IACOFANO GOLTSMAN, INC.
801 N. HARBOR BLVD.
FULLERTON, CA 92831
TEL 714/871-3638
FAX 714/871-1188
www.migcom.com

CONSULTANT:

PLANS PREPARED BY:
WALDEN & ASSOCIATES
CIVIL ENGINEERS - LAND SURVEYORS - PLANNERS
2020 WHITE BOAD - SUITE B, IRVINE, CA 92614
(949) 660-0110 - FAX (949) 660-0458

PROJECT TEAM:
LANDSCAPE ARCHITECT
MIG INC.

ARCHITECT
PITASSI ARCHITECTS INC.

CIVIL ENGINEERS/SURVEYOR
WALDEN & ASSOCIATES

STRUCTURAL ENGINEERS
CORREIA CONSULTING & DESIGN

ELECTRICAL ENGINEERS
LRA ENGINEERS

IRRIGATION DESIGNER
WILLIAMS IRRIGATION DESIGN

GEOTECHNICAL ENGINEERS
CONVERSE CONSULTANTS

TURF GRASS CONSULTANT
GUISE AND ASSOCIATES

PERRIS VALLEY Big League Dreams

2155 Trumble Road
Perris, California, 92570

SHEET TITLE
STORM DRAIN PLAN DETAIL SHEET

100% CONSTRUCTION DOCUMENT

DATE	REVISIONS

STAMP

CHECKED BY	DATE
D.B.	01-07-10
DATE 01-07-10	FILE NAME
DRAWN BY B.A.	SHEET C3.01
JOB NO. 05208.00	
SCALE AS SHOWN	29 OF 313 SHEETS