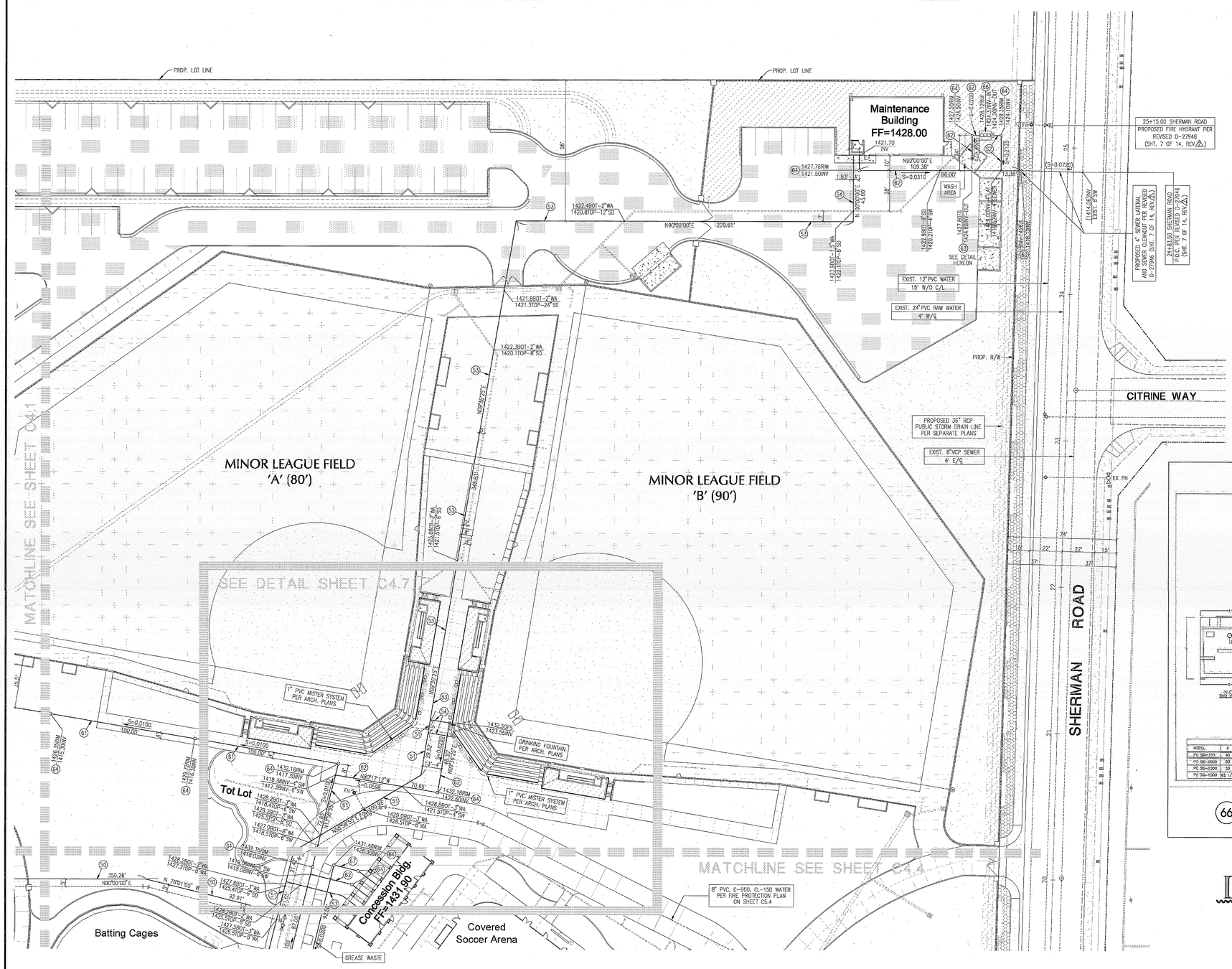

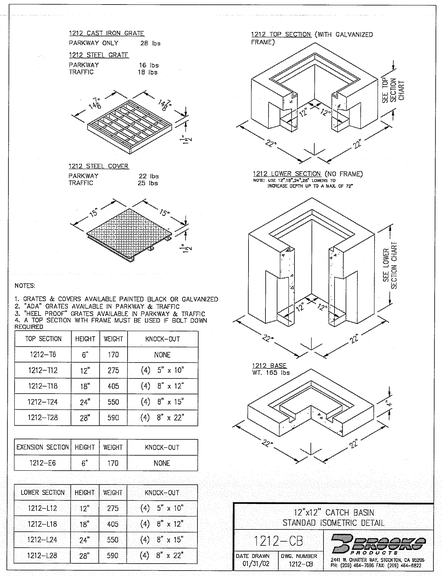

TOP SECTION	HEIGHT	WEIGHT	KNOCK-OUT
1212-T6	6"	170	NONE
1212-T12	12"	275	(4) 5" x 10"
1212-T18	18"	405	(4) 8" x 12"
1212-T24	24"	550	(4) 8" x 15"
1212-T28	28"	590	(4) 8" x 22"

EXENSION SECTION	HEIGHT	WEIGHT	KNOCK-OUT
1212-E6	6"	170	NONE

LOWER SECTION	HEIGHT	WEIGHT	KNOCK-OUT
1212-L12	12"	275	(4) 5" x 10"
1212-L18	18"	405	(4) 8" x 12"
1212-L24	24"	550	(4) 8" x 15"
1212-L28	28"	590	(4) 8" x 22"

63 12" x 12" WASH AREA CATCH BASIN DETAIL
NO SCALE

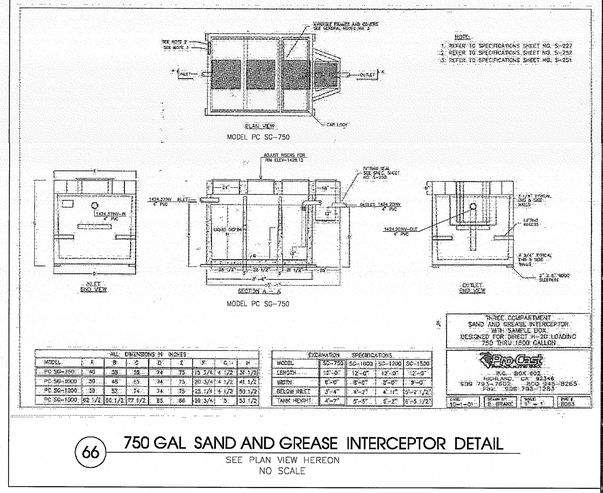

66 750 GAL SAND AND GREASE INTERCEPTOR DETAIL
SEE PLAN VIEW HEREON
NO SCALE

DIGALERT
DIAL TOLL FREE
1-800-422-4133
AT LEAST TWO DAYS BEFORE YOU DIG
UNDERGROUND SERVICE ALERT OF SOUTHERN CALIFORNIA

0' 15' 30' 60'

WATER CONSTRUCTION NOTES

(50) CONSTRUCT 4" PVC AWWA C-900, CL150 PIPE WITH TRACING WIRE PER E.M.W.D. STD. DWG. B-533 & B-656. PIPE BEDDING PER E.M.W.D. STD. DWG. B-408, AND TRENCH BACKFILL PER E.M.W.D. STD. DWG. B-286B.

(51) CONSTRUCT 3" PVC PIPE, CL200 WITH TRACING WIRE PER E.M.W.D. STD. DWG. B-533 & B-656. PIPE BEDDING PER E.M.W.D. STD. DWG. B-408, AND TRENCH BACKFILL PER E.M.W.D. STD. DWG. B-286B.

(53) CONSTRUCT 2" PVC PIPE, CL200 WITH TRACING WIRE PER E.M.W.D. STD. DWG. B-533 & B-656. PIPE BEDDING PER E.M.W.D. STD. DWG. B-408, AND TRENCH BACKFILL PER E.M.W.D. STD. DWG. B-286B.

(54) CONSTRUCT 1 1/2" PVC PIPE (SCH 40) WITH TRACING WIRE PER E.M.W.D. STD. DWG. B-533 & B-656. PIPE BEDDING PER E.M.W.D. STD. DWG. B-408, AND TRENCH BACKFILL PER E.M.W.D. STD. DWG. B-286B.

SEWER CONSTRUCTION NOTES

(60) JOIN EXISTING SEWER CLEANOUT AT PUBLIC RIGHT-OF-WAY PER E.M.W.D. STD. DWG. SB-52.

(61) CONSTRUCT 6" PVC (SDR 35) SEWER LINE, PIPE BEDDING PER E.M.W.D. STD. DWG. SB-157.

(62) CONSTRUCT 4" PVC (SDR 35) SEWER LINE, PIPE BEDDING PER E.M.W.D. STD. DWG. SB-157.

(63) CONSTRUCT 12"x12" BROOKS CATCH BASIN 1212-CB AT WASH AREA, PER DETAIL #63 HEREON.

(64) CONSTRUCT SEWER CLEANOUT PER E.M.W.D. STD. DWG. SB-52.

(66) CONSTRUCT 750 GAL SAND AND GREASE INTERCEPTOR WITH SAMPLE BOX, MODEL PC SG-750 BY PRO-CAST PER DETAIL #66 HEREON (OR APPROVED EQUAL).

(67) CONSTRUCT 3" PVC (SDR 35) SEWER LINE, PIPE BEDDING PER E.M.W.D. STD. DWG. SB-157.

NOTES

1. SEE SHEET C1.0 FOR LEGEND AND ABBREVIATIONS.
2. SEE SHEET C2.2 FOR GRADING AND SURFACE DRAINAGE.
3. SEE SHEET C3.2 FOR STORM DRAIN CONSTRUCTION.
4. SEE SHEET C5.2 FOR UNDERGROUND FIRE LINES CONSTRUCTION.

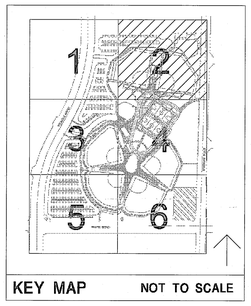

KEY MAP NOT TO SCALE

MIG
MOORE IACOFANO GOLTSMAN, INC.
801 N. HARBOR BLVD.
FULLERTON, CA 92831
TEL 714/871-3638
FAX 714/871-1188
www.migcom.com

CONSULTANT:

PLANS PREPARED BY:
WALDEN & ASSOCIATES
CIVIL ENGINEERS - LAND SURVEYORS - PLANNERS
2020 WHITE ROAD - SUITE B, IRVINE, CA 92614
(949) 660-0110 - FAX (949) 660-0458

PROJECT TEAM:
LANDSCAPE ARCHITECT
MIG INC.

ARCHITECT
PITASSI ARCHITECTS INC.

CIVIL ENGINEERS/SURVEYOR
WALDEN & ASSOCIATES

STRUCTURAL ENGINEERS
CORREIA CONSULTING & DESIGN

ELECTRICAL ENGINEERS
LRA ENGINEERS

IRRIGATION DESIGNER
WILLIAMS IRRIGATION DESIGN

GEOTECHNICAL ENGINEERS
CONVERSE CONSULTANTS

TURF GRASS CONSULTANT
GUISE AND ASSOCIATES

PERRIS VALLEY Big League Dreams

2155 Trumble Road
Perris, California, 92570

SHEET TITLE
SEWER AND WATER PLAN (PRIVATE)

100% CONSTRUCTION DOCUMENT

DATE	REVISIONS

STAMP
REGISTERED PROFESSIONAL ENGINEER DAVID LEE BARTON No. 40496 CIVIL STATE OF CALIFORNIA

CHECKED BY	DATE
D.B.	01-07-10
DATE 01-07-10	FILE NAME
DRAWN BY B.A.	SHEET C4.2
JOB NO. 05208.00	
SCALE 1"=30'-0"	46 OF 313 SHEETS